INTENSITY®

Refresh your life

RHGM - 090 & 120 Series

Commercial Air Handler

Featuring Earth-Friendly R-410A Refrigerant

Nominal Sizes 7.5 & 10 Ton [26 & 35 kW]

ISO 9001:2000

Certificate Number: 3064

c UL us LISTED

ARI PERFORMANCE CERTIFIED

MAN-SS-RHGM-0316

intensity.mx

TABLE OF CONTENTS

Unit Features....3
Model Identification....3
Component Location....4
Unit Dimensions....5
Physical Data....6
Drive Package Data....6
Airflow Performance Data....7-9
Performance Data....10-11
Electric Heater Kits....12
Accessories....13-19
Piping....20
Guide Specifications....21

CABINET—Powder coat painted. Matching discharge plenums and decorative supply and return air grilles are available for use when units are to be installed within conditioned space.

MOTOR—Inherently protected motors are mounted inside of insulated cabinet to reduce motor noise. A choice of motor horsepowers and drive combinations are available to allow you to meet specified CFM at various static pressures up to 2" [.498 kPa] external static pressure.

LOW PROFILE—Allows for horizontal installation in most standard drop ceiling applications, and the movement of units through most standard doorways for addition or replacement work.

THERMAL EXPANSION VALVES—Standard all models.

FILTERS—One inch [25 mm] throwaway filters are standard, but filter racks are designed to accept either one inch [25 mm] or two inch [51 mm] filters.

EVAPORATOR COIL—Two circuit, interlaced row split coils are constructed with copper tubes and aluminum fins mechanically bonded to the tubes for maximum heat transfer capabilities. All coil assemblies are leak tested up to 450 PSIG [3100 kPa] internal pressure prior to installation into units.

REFRIGERANT CONNECTIONS—Field piping connections are made through a fixed post between two side access panels on either side of the unit. Allows flexibility to meet most field conditions as well as full accessibility after the installation is complete. Units may be used with two straight cool condensing units or single circuit manifolded in the field using the copper fittings shipped with each unit. The RHGM Air Handler has not been tested, rated or certified to operate with dual remote heat pumps.

DRAIN PAN—The galvanized steel drain pan is designed to trap condensate in either vertical or horizontal installations. Condensate drain connections are located on both sides of the unit allowing complete flexibility to meet most field conditions.

SERVICE ACCESS—Two removable panels on top and each side of the unit are easily removed for access to motors, blowers, sheaves, and filters.

HORIZONTAL OR VERTICAL—All models are designed for either application and can be installed in either position as supplied from the factory.

TESTING—All units are run tested at the factory prior to shipment. Units are shipped with a holding charge of nitrogen.

HEAT PUMP—The RHGM-120 Air Handler is designed for heat pump and air conditioning applications. It has two TX valves with internal check valves that allow reverse flow to occur, providing superior control during heating and cooling cycles. RHGM-120 Air Handler has been rated and certified to operate with 7.5 ton [26 kW] and 10 ton [35 kW] condensing units and 7.5 ton [26 kW] and 10 ton [35 kW] remote heat pumps. A 7.5 ton [26 kW] heat pump air handler is **NOT** available.

R H G M — 120 Z L

- **L** — Drive Package (see page 8)
  - J = Optional (Field Supplied)
  - *K = Standard
  - L = Optional
  - M = Optional
  - N = Optional (Field Supplied)
  - O = Optional (Field Supplied)
- **Z** — Electrical Designation
  - *H = 115-230-1-60 (090/120 only)
  - Z = 208-230/460-3-60
- **120** — Nominal Tons
  - 090 = 7.5 Tons [26 kW]
  - 120 = 10.0 Tons [35 kW]
- **M** — Design Series
  - M = Refrigerant R-410A
- **G** — Type
- **H** — Air Handler
- **R** — Trademark

*"H" voltage models are available with "K" drive package only.

[ ] Designates Metric Conversions

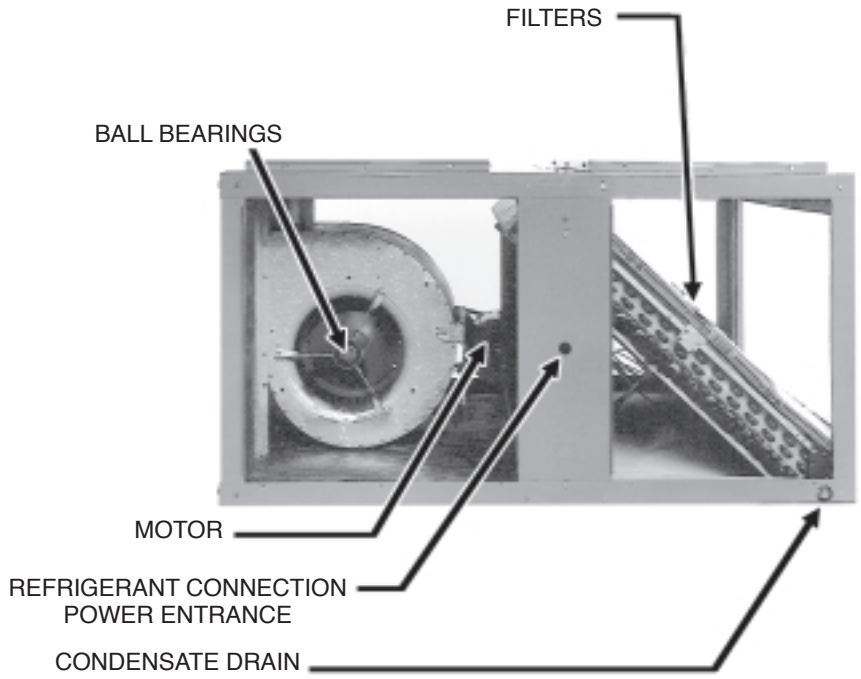

7½ & 10 TON [26 & 35 kW]

7½ ton [26 kW] & 10 ton [35 kW] unit with side panel removed for coil connections and air filter access.

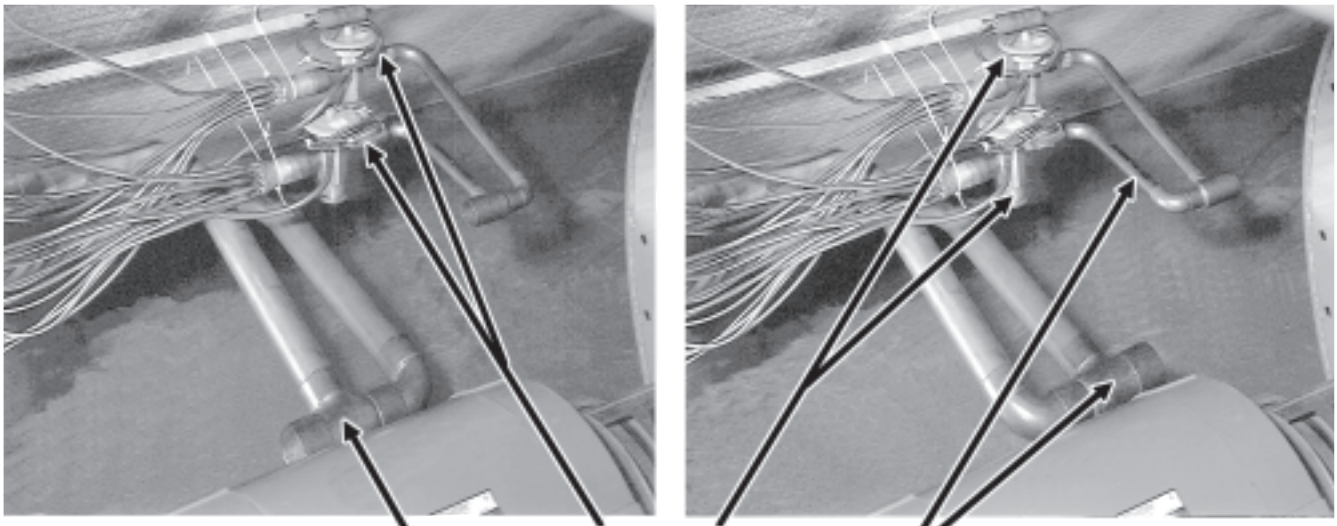

RHGM- 7½-10 TON [26-35 kW]

RHGM- 7½-10 TON [26-35 kW]

[ ] Designates Metric Conversions

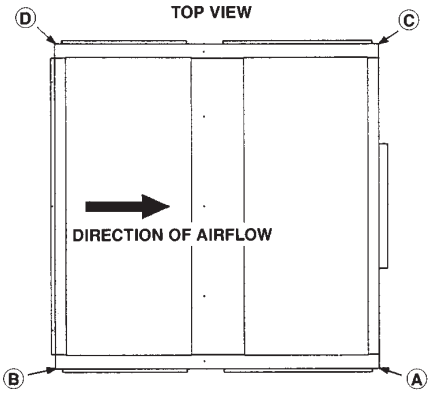

RETURN AIR OPENINGS = 47 3/8″ [1203] WIDTH x 19 7/8″ [505] HEIGHT

7.5 AND 10 NOMINAL TONS [26 AND 35 kW]

MODEL	REFRIGERANT STUB SIZES, IN. [mm]			
	DUAL LIQ.	DUAL SUC.	SINGLE LIQ.	SINGLE SUC.
090	1/2, 1/2 [13, 13]	7/8, 7/8 [22, 22]	5/8 [16]	1 3/8 [35]
120	1/2, 1/2 [13, 13]	7/8, 7/8 [22, 22]	5/8 [16]	1 3/8 [35]

MODEL	CORNER WEIGHTS, LBS. [kg]				TOTAL WEIGHT
	A	B	C	D	
090	98 [44]	86 [40]	97 [44]	84 [38]	365 [166]
120	100 [45]	88 [40]	97 [44]	87 [40]	372 [169]

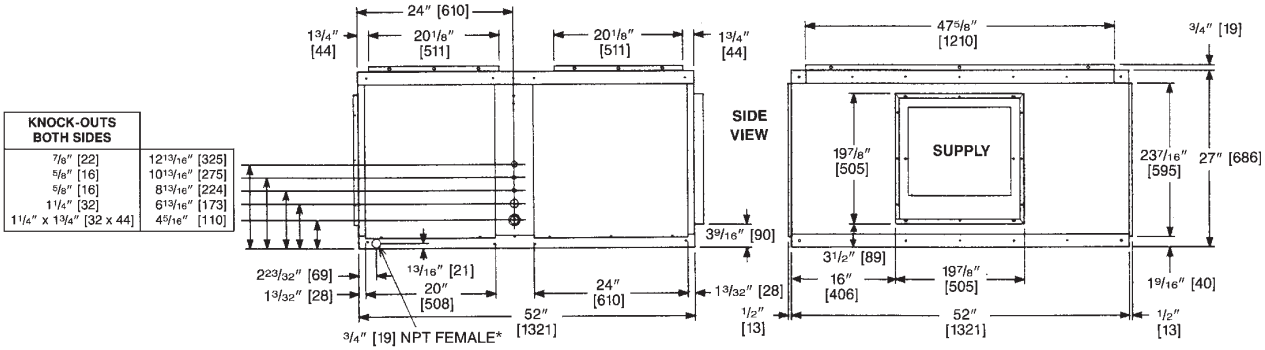

*Drain connections are provided on both sides of the drain pan. The drain can be connected to either side of the drain pan, but not both. The drain must be trapped.

PHYSICAL DATA/DRIVE PACKAGE DATA—RHGM- SERIES

ITEM		MODEL NO. RHGM-	
		090	120
Nominal Size tons [kW]		7.5 [26]	10 [35]
Nominal CFM [L/s] @ Rated E.S.P., in. [kPa] of water		3000 @ .25 [1416 @ .062]	3000 @ .25 [1416 @ .062] 4000 @ .30 [1888 @ .075]
MOTOR	Standard— 3450 RPM [W] 1 Ø 1725 RPM [W] 3 Ø	1 HP [766] 1 HP [766]	2 HP [1491] 1 1/2 HP [1119]
	Optional— 1725 RPM [W] 3 Ø	1 1/2 HP [1119]	2 HP, 3 HP [1491, 2237]
Blower Size—diameter & width, in. [mm]		12 x 12 [305 x 305]	12 x 12 [305 x 305]
Blower Shaft Size (diameter) in. [mm]		3/4 [19]	3/4 [19]
Motor Sheave Size Adjustment (std.) in. [mm]	3450 RPM 1 Ø 1725 RPM 3	1.9-2.9 [48-74] 3.4-4.4 [86-112]	2.4-3.2 [61-81] 4.0-5.0 [102-127]
Coil Face Area, sq. feet [m 2]		10.2 [.95]	10.2 [.95]
Coil Tube Diameter in. [mm]		3/8 [10]	3/8 [10]
Coil, Rows Deep—Fins Per Inch [mm]		4/15 [.59]	4/15 [.59]
Refrigerant Control—Thermal Expansion Valves (Quantity)		BBIZE-5-GA (2)	CBBIZE-6-GA (2)
Filter Size, in. [mm] (Number Required) Disposable*		16 x 25 x 1 (4) [406 x 635 x 25]	16 x 25 x 1 (4) [406 x 635 x 25]
CABINET: Finish		Powder Paint	Powder Paint
Sheet Metal		Galvanized	Galvanized
Gauge (nominal) Top		18	18
Sides		16	16
Bottom		18	18
Doors and Covers		20 min.	20 min.
UNIT WEIGHTS: Operating (lbs.) [kg]		365 [166]	372 [170]
Shipping (lbs.) [kg]		411 [186]	418 [190]
PACKAGED DIMENSIONS: (H x W x L) [mm]		31 1/2" x 56" x 57 1/4" [800 x 1422 x 1454]	31 1/2" x 56" x 57 1/4" [800 x 1422 x 1454]

*Unit will accept 2" [51 mm] filters.

NOTE: If a factory accessory heater kit is not used, a field supplied fan contactor is required and should have a 24 volt coil with contacts rated to handle the evaporator motor FLA at desired voltage. A factory supplied 30 Amp 3 Pole or 30 Amp 2 Pole contactor may be purchased from the Parts Department.

[ ] Designates Metric Conversions

INDOOR BLOWER PERFORMANCE (DRY COIL) RHGM-090 HK & 120 HK

DRIVE PKG	STD CFM	E.S.P.—INCHES OF WATER [kPa]																																							
		.1 [0.02]		.2 [0.05]		.3 [0.07]		.4 [0.10]		.5 [0.12]		.6 [0.15]		.7 [0.17]		.8 [0.20]		.9 [0.22]		1.0 [0.25]		1.1 [0.27]		1.2 [0.30]		1.3 [0.32]		1.4 [0.35]		1.5 [0.37]		1.6 [0.40]		1.7 [0.42]		1.8 [0.45]		1.9 [0.47]		2.0 [0.50]	
		RPM T.O.	W	RPM T.O.	W	RPM T.O.	W	RPM T.O.	W	RPM T.O.	W	RPM T.O.	W	RPM T.O.	W	RPM T.O.	W	RPM T.O.	W	RPM T.O.	W	RPM T.O.	W	RPM T.O.	W	RPM T.O.	W	RPM T.O.	W	RPM T.O.	W	RPM T.O.	W	RPM T.O.	W	RPM T.O.	W	RPM T.O.	W	RPM T.O.	W
K	3000 [1416 L/s]									780 5	1110	820 4.4	1200	860 4	1280	895 3.5	1350	930 3	1440	960 2.6	1500	980 2.3	1545	1005 2	1590	1035 1.5	1670	1060 1	1780	1090 .5	1870	1120 0	1960								
	3200 [1510 L/s]							780 5	1200	820 4.4	1270	850 4.1	1360	890 3.6	1440	910 3.2	1520	950 2.8	1595	980 2.4	1660	1005 2	1730	1030 1.5	1820	1055 1.1	1915	1080 .6	2030	1115 .1	2130								
	3400 [1605 L/s]					775 5	1130	790 4.8	1330	840 4.2	1440	880 3.7	1530	900 3.3	1620	945 2.8	1705	970 2.5	1780	1000 2	1880	1025 1.6	1955	1050 1.1	2080	1070 .6	2190	1110 .1	2325												
	3600 [1699 L/s]			775 5	1400	805 4.6	1465	835 4.2	1545	870 3.8	1630	900 3.3	1725	930 3	1800	960 2.5	1890	990 2.1	2005	1020 1.6	2110	1045 1.1	2230	1070 .6	2380																
	3800 [1793 L/s]	770 5	1510	810 4.6	1580	830 4.2	1655	865 3.8	1725	900 3.4	1840	920 3	1930	960 2.5	2030	985 2.1	2155	1015 1.6	2285																				
	4000 [1888 L/s]	805 4.6	1695	825 4.2	1770	860 3.8	1860	900 3.3	1975	920 3	2075	955 2.5	2205	980 2.1	2315																								
	4200 [1982 L/s]	830 4.2	1890	865 3.7	2000	900 3.3	2095	930 2.9	2240	960 2.4	2365																												
	4400 [2077 L/s]	870 3.6	2145	900 3.2	2275																																		
	4600 [2171 L/s]																																						
	4800 [2265 L/s]																																						

K = IVP34, AZ90, 2 HP [1491 W] 1 Ø

NOTES: T.O. = Turns Open

1. Standard air @ .075 lbs/ft³
2. Operation below heavy lines require optional drives.
3. Motor efficiency = .70
4. BHP = $\frac{\text{WATTS x MOTOR EFFICIENCY}}{746}$
5. BHP = Brake Horsepower
   RPM = Blower Speed

RHGM-090 Z, -120 Z

DRIVE PKG	STD CFM	E.S.P.—INCHES OF WATER [kPa]																																							
		.1 [0.02]		.2 [0.05]		.3 [0.07]		.4 [0.10]		.5 [0.12]		.6 [0.15]		.7 [0.17]		.8 [0.20]		.9 [0.22]		1.0 [0.25]		1.1 [0.27]		1.2 [0.30]		1.3 [0.32]		1.4 [0.35]		1.5 [0.37]		1.6 [0.40]		1.7 [0.42]		1.8 [0.45]		1.9 [0.47]		2.0 [0.50]	
		RPM	W	RPM	W	RPM	W	RPM	W	RPM	W	RPM	W	RPM	W	RPM	W	RPM	W	RPM	W	RPM	W	RPM	W	RPM	W	RPM	W	RPM	W	RPM	W	RPM	W	RPM	W	RPM	W	RPM	W
J K L M N O	2400 [1133 L/s]	—	—	—	—	—	—	650	510	690	570	720	610	760	670	790	755	815	805	845	860	875	940	920	1125	955	1110	990	1200	1000	1320	1040	1350	1080	1490	1100	1630	1130	1670	1150	1700
	2600 [1227 L/s]	—	—	—	—	635	545	675	620	715	665	750	720	780	795	810	860	830	910	860	990	890	1070	930	1150	960	1230	995	1310	1020	1400	1060	1460	1100	1510	1120	1680	1140	1730	1160	1790
	2800 [1321 L/s]	—	—	630	595	665	665	705	720	740	775	775	850	795	915	825	975	855	1075	885	1165	915	1210	950	1285	980	1370	1000	1450	1040	1530	1080	1590	1120	1650	1130	1720	1150	1800	1175	1880
	3000 [1416 L/s]	630	660	660	730	695	775	730	880	755	940	790	1005	825	1065	855	1130	885	1190	920	1290	955	1380	980	1425	1010	1500	1035	1620	1065	1690	1100	1750	1110	1800	1140	1880	1160	1920	1185	1980
	3200 [1510 L/s]	660	810	695	860	730	950	750	1005	785	1080	815	1150	850	1225	880	1285	910	1390	950	1470	975	1540	1010	1620	1030	1740	1065	1820	1095	1880	1095	1890	1125	1985	1155	2045	1175	2090	1190	2160
	3400 [1605 L/s]	690	940	725	1000	745	1090	780	1160	810	1240	845	1320	875	1390	910	1500	945	1590	970	1650	995	1725	1025	1860	1055	1940	1055	1900	1080	1975	1110	2095	1140	2185	1165	2245	1180	2270	1200	2315
	3600 [1699 L/s]	730	1100	745	1175	780	1250	810	1340	845	1435	875	1510	905	1620	945	1715	960	1780	990	1855	1020	1995	1050	2080	1080	2160	1080	2165	1105	2225	1135	2325	1155	2400	1175	2460	1195	2510	1220	2575
	3800 [1793 L/s]	745	1265	780	1350	810	1455	840	1550	875	1630	905	1740	940	1840	955	1905	990	2050	1025	2145	1045	2225	1075	2315	1075	2270	1100	2390	1130	2495	1150	2590	1170	2650	1190	2710	1220	2770	1265	2895
	4000 [1888 L/s]	780	1465	810	1575	850	1690	880	1780	910	1880	940	2010	970	2110	990	2180	1020	2300	1050	2400	1075	2490	1075	2445	1100	2570	1130	2690	1145	2785	1170	2855	1185	2920	1215	2985	1260	3090	1275	3165
	4200 [1982 L/s]	825	1750	855	1840	885	1925	920	2060	940	2160	965	2260	995	2365	1025	2470	1050	2560	1080	2680	1080	2685	1100	2795	1130	2890	1150	3000	1165	3080	1190	3145	—	—	—	—	—	—	—	—
	4400 [2077 L/s]	845	1925	905	2100	925	2195	950	2320	970	2430	995	2550	1030	2650	1050	2755	1055	2760	1085	2855	1100	2985	1130	3115	—	—	—	—	—	—	—	—	—	—	—	—	—	—	—	—
	4600 [2171 L/s]	915	2225	930	2375	955	2495	980	2620	1010	2750	1030	2840	1035	2950	1055	2960	1080	3070	—	—	—	—	—	—	—	—	—	—	—	—	—	—	—	—	—	—	—	—	—	—
	4800 [2265 L/s]	930	2555	960	2680	985	2810	1015	2940	1035	3040	1035	3045	1055	3180	—	—	—	—	—	—	—	—	—	—	—	—	—	—	—	—	—	—	—	—	—	—	—	—	—	—
	5000 [2360 L/s]	960	2870	990	3010	1020	3135	—	—	—	—	—	—	—	—	—	—	—	—	—	—	—	—	—	—	—	—	—	—	—	—	—	—	—	—	—	—	—	—	—	—

J = IVP50, AZ100, 1½ HP [1119 W] [Field Supplied]
K = IVP56, AZ100, 1½ HP [1119 W]
L = IVP68, AZ100, 2 HP [1491 W]
M = IVP68, AZ100, 3 HP [2237 W]
N = IVP65, AZ80, 3 HP [2237 W] [Field Supplied]
O = IVP75, AZ90, 3 HP [2237 W] [Field Supplied]
NOTE: Bold lines separate J, K, L, M, N and O drives respectively.

[ ] Designates Metric Conversions

COMPONENT AIR RESISTANCE

RHGM 7.5 TON [26 kW] & 10 TON [35 kW]

CFM [L/s]	1800 [850]	2200 [1038]	2600 [1227]	3000 [1416]	3400 [1605]	3800 [1793]	4200 [1982]	4600 [2171]	5000 [2360]
Electric Heater 20KW, 30KW	.060 [.015]	.100 [.025]	.140 [.034]	.160 [.040]	.230 [.057]	.320 [.080]	.410 [.102]	.500 [.124]	.600 [.150]
Mixing Box (R/A Damper Open)	.006 [.001]	.008 [.002]	.012 [.003]	.024 [.006]	.038 [.009]	.053 [.013]	.068 [.017]	.080 [.020]	.095 [.024]
Discharge Grille (Set Max. Open)	.008 [.002]	.011 [.003]	.015 [.004]	.020 [.005]	.025 [.006]	.031 [.008]	.039 [.010]	.046 [.012]	.055 [.014]
Inlet Grille	.008 [.002]	.010 [.002]	.014 [.003]	.020 [.005]	.026 [.006]	.032 [.008]	.039 [.010]	.049 [.012]	.058 [.014]
Discharge Plenum	.02 [.005]	.04 [.010]	.05 [.012]	.065 [.016]	.085 [.021]	.100 [.025]	.120 [.030]	.150 [.037]	.180 [.045]

NOTE: Add component resistance to duct resistance to determine total E.S.P.

[ ] Designates Metric Conversions

BLOWER PERFORMANCE CURVES—7.5 & 10 TON [26 & 35 kW] (WET COIL)

7.5 & 10 TON [26 & 35 kW] (RHGM-120 ONLY)
J DRIVE (3 Ø only)

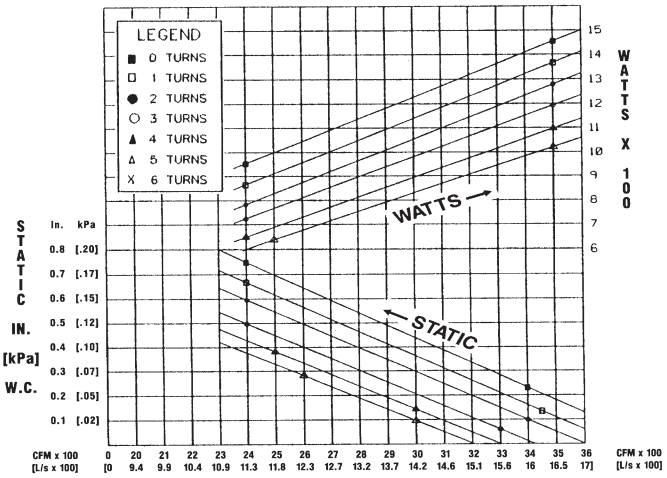

7.5 & 10 TON [26 & 35 kW]
K DRIVE (3 Ø only)

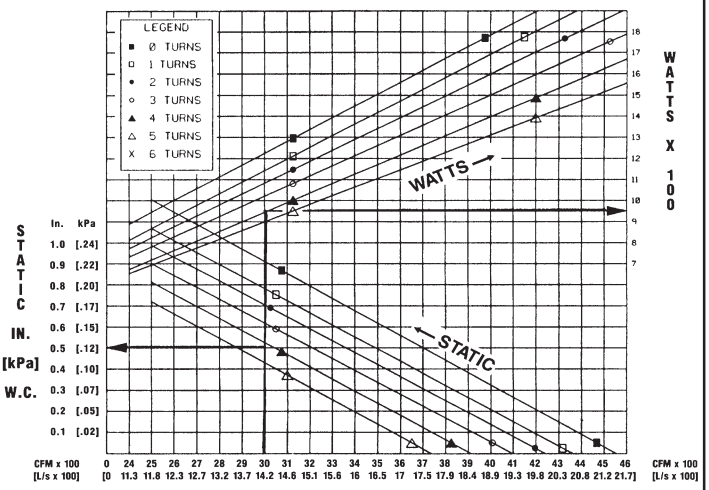

7.5 & 10 TON [26 & 35 kW]
L DRIVE (3 Ø only)

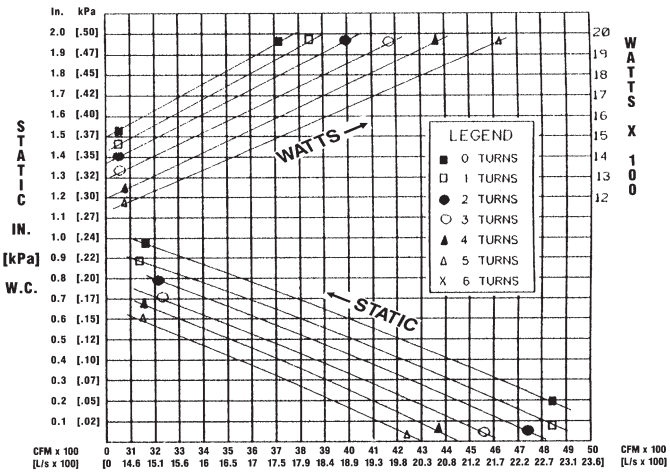

7.5 & 10 TON [26 & 35 kW]
M DRIVE (3 Ø only)

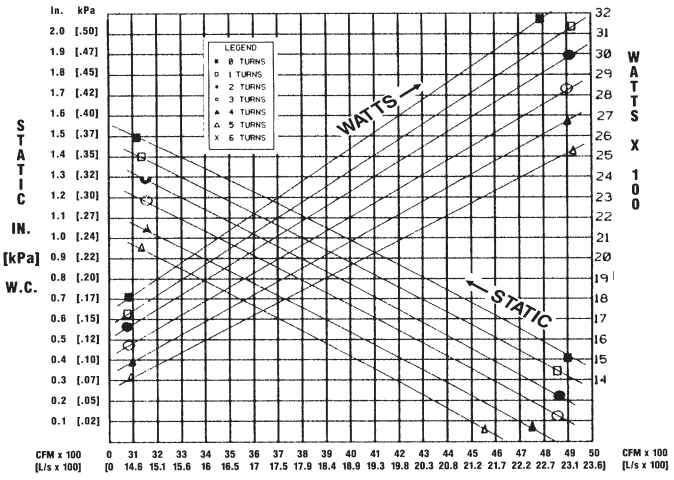

7.5 & 10 TON [26 & 35 kW]
N DRIVE (3 Ø only)

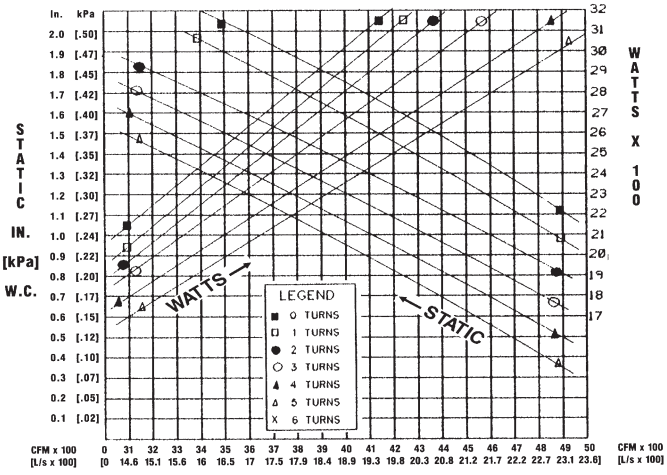

7.5 & 10 TON [26 & 35 kW]
O DRIVE (3 Ø only)

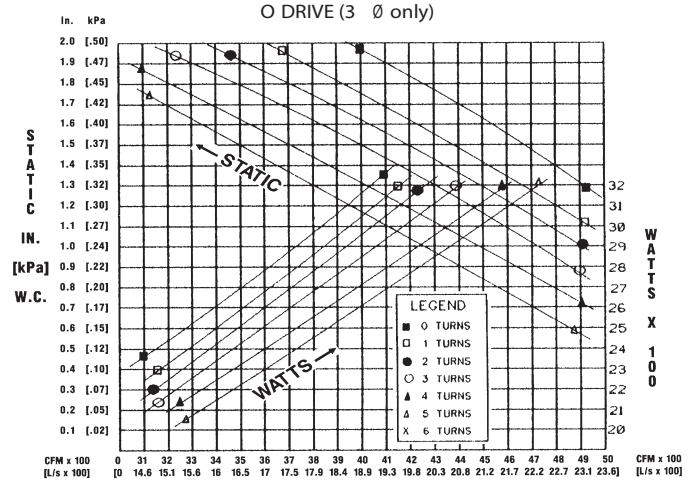

[ ] Designates Metric Conversions

EVAPORATOR PERFORMANCE DATA (GROSS CAPACITY)

EVAPORATOR/AIR HANDLER RHGM-090 @ 3000 CFM [1416 L/s] 105°F (40.8°C) LIQUID TEMPERATURE AT TXV													
AIRFLOW	EVAP. TEMP	75/63°F				80/67°F				55/71°F			
		TC	SC	LDB °F	LWB °F	TC	SC	LDB °F	LWB °F	TC	SC	LDB °F	LWB °F
3000	40	101,593	73,674	52.9	51.0	127,358	84,666	63.8	51.9	153,992	94,880	54.9	53.1
	45	80,928	62,952	57.3	54.8	103,594	73,170	58.8	56.3	130,995	83,959	59.4	57.3
	50	59,031	52,456	61.6	66.7	80,997	82,400	63.0	50.2	105,321	72,678	64.1	61.6

EVAPORATOR/AIR HANDLER RHGM-120 @ 3800 CFM [1793 L/s] 105°F (40.6°C) LIQUID TEMPERATURE AT TXV													
AIRFLOW	EVAP. TEMP	75/63°F				80/67°F				85/71°F			
		TC	SC	LDB °F	LWB °F	TC	SC	LDB °F	LWB °F	TC	SC	LDB °F	LWB °F
3800	40	154,071	108,420	49.6	48.2	190,237	123,295	50.5	48.1	189,959	10,8803	60.4	58.6
	45	121,745	92,384	54.1	52.3	157,209	107,660	66.0	53.4	196,257	122,470	55.9	54.3
	50	88,849	77,108	58.5	56.3	122,773	91,908	59.5	57.5	159,969	108,803	60.4	56.6

NOTES: 1. Total and sensible capacity is gross with no deduction for indoor blower motor heat. 2. Interpolation is permissible. Do not extrapolate.
3. Capacities are based on 105°F (40.6°C) liquid temperature at the TXV or about 95°F (35°C) dry bulb outdoor ambient.
TC = Total Capacity, BTUH LDB = Leaving Air Dry Bulb
SC = Sensible Capacity, BTUH LWB = Leaving Air Wet Bulb

AIRFLOW CORRECTION FACTORS

RHGM-090 @ 3000 CFM [1416 L/s]							
ACTUAL—CFM [L/s]	2400 [1133]	2600 [1227]	2800 [1321]	3000 [1416]	3200 [1510]	3400 [1605]	3600 [1699]
TOTAL MBH	0.85	0.90	0.95	1.00	1.04	1.09	1.13
SENSIBLE MBH	0.83	0.88	0.94	1.00	1.06	1.11	1.16

NOTES: 1. Multiply correction factor times gross performance data.
2. Resulting sensible capacity cannot exceed total capacity.

RHGM-120 @ 3800 CFM [1793 L/s]													
ACTUAL—CFM [L/s]	2400 [1133]	2600 [1227]	2800 [1321]	3000 [1416]	3200 [1510]	3400 [1605]	3600 [1699]	3800 [1793]	4000 [1888]	4200 [1982]	4400 [2077]	4600 [2171]	4800 [2265]
TOTAL MBH	0.76	0.79	0.82	0.85	0.89	0.93	0.97	1.00	1.03	1.06	1.10	1.12	1.15
SENSIBLE MBH	0.68	0.73	0.78	0.82	0.87	0.91	0.96	1.00	1.04	1.08	1.13	1.17	1.21

NOTES: 1. Multiply correction factor times gross performance data.
2. Resulting sensible capacity cannot exceed total capacity.

[ ] Designates Metric Conversions

ELECTRIC HEATER KIT CHARACTERISTICS

AIR HANDLER MODEL	HEATER KIT MODEL	HEATER KIT VOLTAGE	HEATER KIT [kW]	HEATER KIT AMPS	HEATING CAPACITY [kW]	HEATING CAPACITY MBH	MINIMUM CIRCUIT AMPACITY	MAX. FUSE OR HACR BREAKER SIZE
RHGM-090 / RHGM-120	RXHE-DE020CA	208/240	20	43.1/48.9	15.6/20.2	53.2/68.9	67/73	70/80
RHGM-090 / RHGM-120	RXHE-DE030CA	208/240	30	60.8/70.2	22.0/29.6	75.1/101	89/100	90/100
RHGM-090 / RHGM-120	RXHE-DE020DA	480	20	24.7	20.2	68.9	37	40
RHGM-090 / RHGM-120	RXHE-DE030DA	480	30	35	29.7	101.3	50	50

NOTE: All kits have two stages of capacity, first stage heating is 50% of total capacity.

ELECTRICAL DATA TABLE

AIR HANDLER MOTOR			RATING PLATE AMPS	MOTOR LRA	MINIMUM CIRCUIT AMPACITY	RECOMMENDED M INIMUM Cu WIRE SIZE (3% VOLTAGE 75°C DROP) MAX. RUN IN FEET	MAX. FUSES BREAKERS
HP [W]	VOLTS	PHASE					
1 [746] 1 [746] 1 [746]	208-230 460 115-230	3Ø 3Ø 1Ø	4.0/3.6 1.8 16/8	23.9/21.6 10.8 96/48	15 15 20/15	#14/240 #14/400 #12/120 #14/180	15 15 20/15
1½ [1119] 1½ [1119]	208-230 460	3Ø 3Ø	5.7/5.2 2.6	34.5/31.2 15.6	15 15	#14/230 #14/300	15 15
2 [1491] 2 [1491] 2 [1491]	208-230 460 115-230	3Ø 3Ø 1Ø	7.5/6.8 3.4 24/12	45.1/40.8 20.4 144/72	15 15 30/15	#14/165 #14/275 #10/140 #14/120	15 15 30/15
3 [2237] 3 [2237]	208-230 460	3Ø 3Ø	10.6/9.6 4.8	64.1/58 26.8	15 15	#14/135 #14/230	15 15

NOTE: N.E.C., C.E.C. and local codes take precedence over suggested wire and fuse sizes.

[ ] Designates Metric Conversions

OPTIONAL HEATER KIT

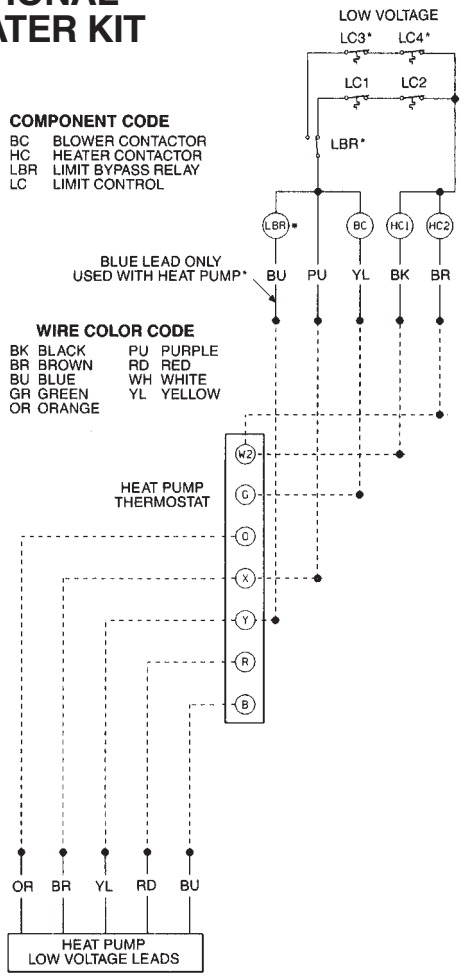

*LBR, LC3 AND LC4 NOT REQUIRED ON 208/240 V KITS RATED 20KW & 30KW OR KITS INSTALLED ON 15 TON OR 20 TON AIR HANDLERS

TYPICAL WIRING CONNECTIONS WITH DUAL CIRCUIT AIR HANDLER, ELECTRIC HEAT & TWO CONDENSING UNITS

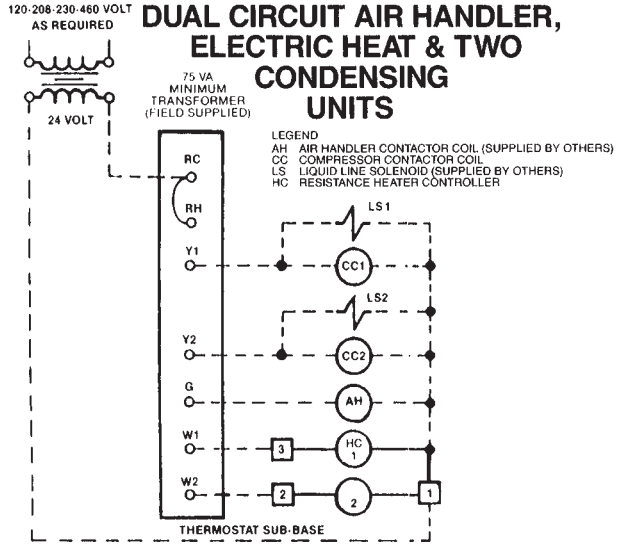

POWER WIRING

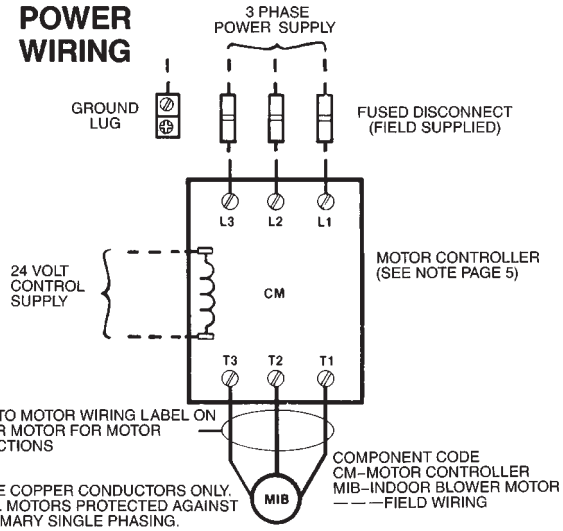

NOTE:
1. USE COPPER CONDUCTORS ONLY.
2. ALL MOTORS PROTECTED AGAINST PRIMARY SINGLE PHASING.

AIR HANDLER ACCESSORIES

ACCESSORY DESCRIPTION	MODEL NUMBER	SIZES USED ON	NET WEIGHT (LBS) [kg]
Hot Water Coil	RXHC-C74W	090, 120	200 [91]
Steam Coil	RXHC-C74S	090, 120	200 [91]
Filter Frame Kit	RXHF-B74A	090, 120	90 [41]
Inlet Grille Kit	RXHG-C74A	090, 120	9 [4]
Discharge Grille Kit	RXHG-C74B	090, 120	15 [7]
Discharge Plenum Kit	RXHL-C74B	090, 120	38 [17]
Mixing Box	RXHM-BC74H	090, 120	120 [54]
Auxiliary Heater Kit	RXHE-DE020*A	090, 120	75 [34]
	RXHE-DE030*A	090, 120	75 [34]

NOTE: *Designates “C”, “D” or “Y” Voltage

[ ] Designates Metric Conversions

RXHM MIXING BOX

RXHE ELECTRIC HEATER KIT

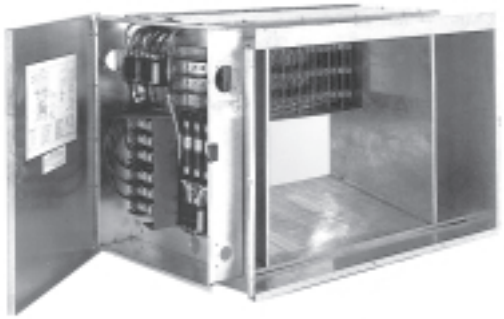

HOT WATER OR STEAM COILS

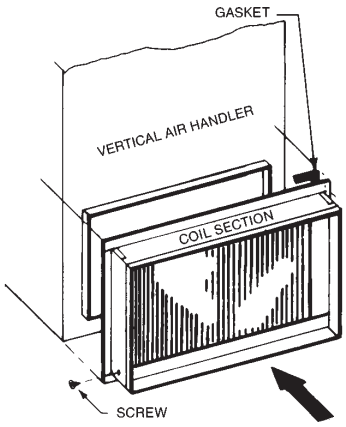

(090, 120) **RXHC-C74W**
RXHC-C74S

(090, 120) **RXHC-C74W**
RXHC-C74

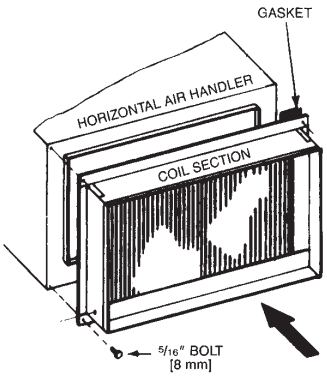

AIR HANDLER ACCESSORIES (con't)

PHYSICAL SPECIFICATIONS

NOMINAL TONS [kW]	FINNED HEIGHT– IN. [mm]	FINNED LENGTH– IN. [mm]	FACE AREA FT ^{2} [m^2]	CIRCUITS & TUBES HIGH
7 1/2 [26.38]-10 [35.17]	18 [457]	40 [1016]	5.0 [.46]	12

GROSS COIL PERFORMANCE

NOMINAL TONS [kW]	NOMINAL BTUH		NOMINAL CFM [L/s]	VELOCITY FPM
	STEAM	WATER		
7 1/2 [26.38]	242,500	185,000	3,000 [1416]	600
10 [35.17]	285,000	240,000	4,000 [1888]	800

1. Entering air temperature @ 60°F
2. Entering steam @ 5 PSIG
3. Entering water @ 200°F
4. Face velocity = $\frac{\text{CFM}}{\text{Face Area}}$

STEAM COIL

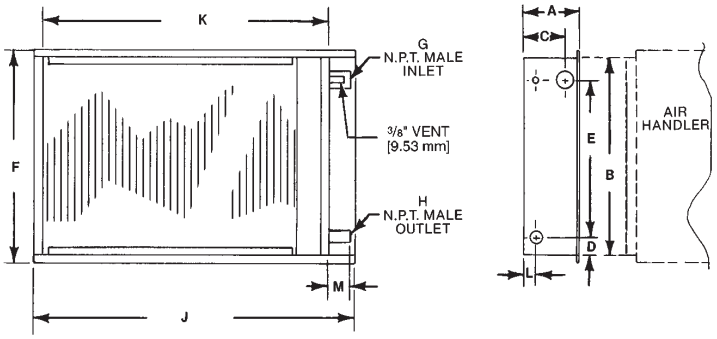

STEAM COIL COIL DIMENSIONS—INCHES [mm]

MODEL	NOMINAL TONS [kW]	A	B	C	D	E	F	G	H	J	K	L	M
RXHC-C74	7 1/2 [26.38]- 10 [35.17]	9 1/16 [230]	21 3/8 [543]	5 3/8 [137]	3 3/16 [81]	15 [381]	24 [610]	1 1/2 [38]	1 1/4 [32]	51 1/2 [1308]	47 5/8 [1210]	2 13/16 [71]	3 1/4 [83]

HOT WATER COIL

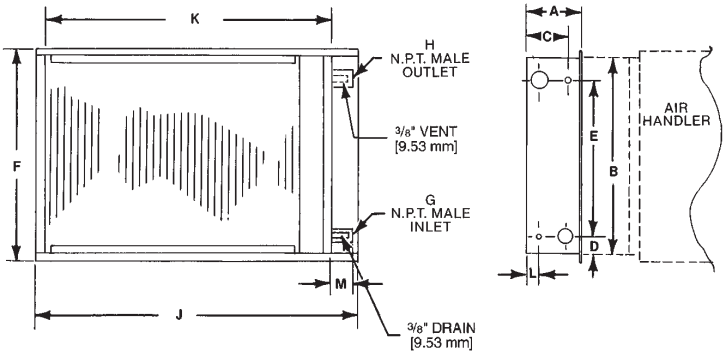

HOT WATER COIL DIMENSIONS—INCHES [mm]

MODEL	NOMINAL TONS [kW]	A	B	C	D	E	F	G	H	J	K	L	M
RXHC-C74W	7 1/2 [26.38]- 10 [35.17]	9 1/16 [230]	21 3/8 [543]	5 3/8 [137]	3 3/16 [81]	15 [381]	24 [610]	1 1/4 [32]	1 1/4 [32]	51 1/2 [1308]	47 5/8 [1210]	2 13/16 [71]	3 [76]

[ ] Designates Metric Conversions

AIR HANDLER ACCESSORIES (con't)

HOT WATER COILS

CURVE 2
HOT WATER COIL

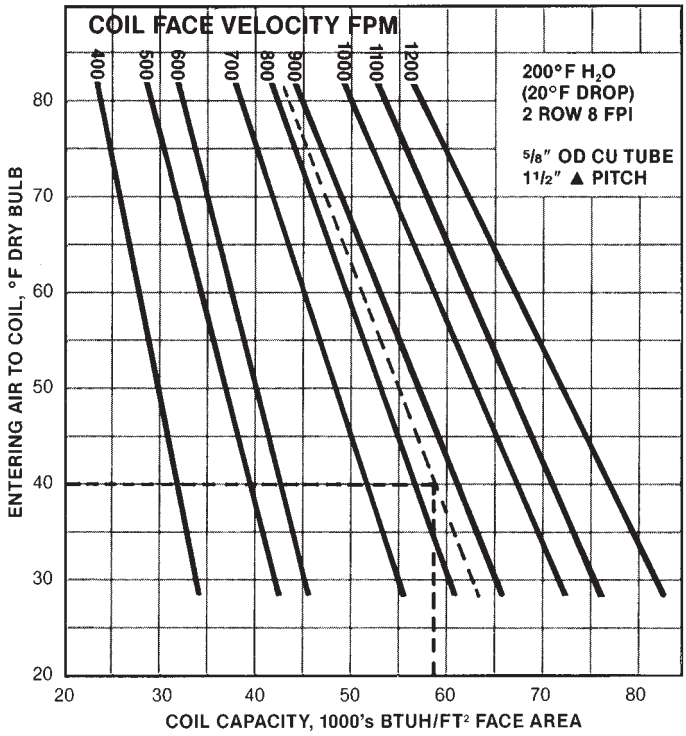

CURVE 3
HOT WATER COIL WATER
PRESSURE DROP

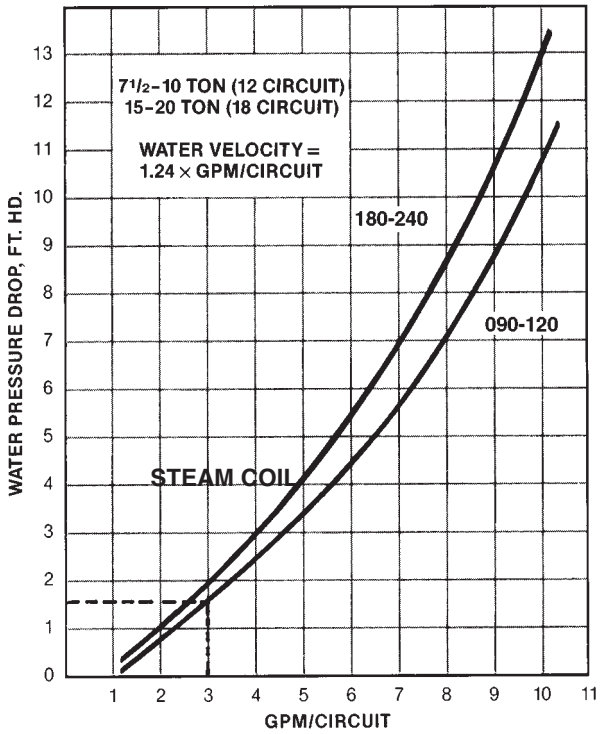

TABLE IV

Curve 2 ratings are based on 200°F entering water and 20°F temperature drop. For other conditions use the following correction factors:

ENTERING WATER °F	FACTOR	WATER TEMPERATURE DROP °F	FACTOR
220	1.14	10	1.030
210	1.07	15	1.015
200	1.00	20	1.000
190	.98	25	.985
180	.93	30	.970

BASIC FORMULA:

$$\text{Air Temperature Rise, °F} = \frac{\text{BTUH}}{1.08 \times \text{CFM}}$$

$$\text{Water Temperature Drop, °F} = \frac{\text{BTUH}}{500 \times \text{GPM}}$$

HOT WATER COIL SELECTION:

Specified:
Entering Air Temp. @ 40°F
5000 CFM @ 6000 Ft. Elevation
220°F Entering Water Temp. @ 36 GPM

Select 10 Ton Nominal Coil:
Face Area = 5 Ft^2
Circuits = 12

Determine Coil Performance:
From Table I, Altitude and Temperature Correction Factor = 1.19 Std. CFM = 5000/1.19 = 4202
Face Velocity = 4202/5 = 840 FPM
From Curve 2, BTUH/Ft^2 = 57,500
Coil Capacity = 5 x 58,000 = 287,500 BTUH
Water Temp. Drop = 290,000/(500 x 36) = 16.1°F
From Table IV, Water Temp. Factor = 1.14
From Table IV, Water Temp. Drop Factor = 1.012
Total Capacity = 287,500 x 1.14 x 1.015 = 334,570 BTUH
From Curve 3, Water Pressure Drop 36 GPM/12 Circuits = 3 GPM/Circuit = 1.6 FT. HD.
From Table II, Air Side Pressure Drop = .38" H_2O

AIR HANDLER ACCESSORIES (con't)

STEAM COILS AIRFLOW

TABLE I
ALTITUDE AND TEMPERATURE CORRECTION FACTOR TABLE

AIR TEMP. (F)	ALTITUDE IN FEET ABOVE SEA LEVEL															
	0	500	1000	1500	2000	2500	3000	3500	4000	4500	5000	6000	7000	8000	9000	10,000
0	.87	.89	.91	.92	.94	.96	.98	.99	1.01	1.03	1.05	1.09	1.13	1.17	1.22	1.26
40	.94	.96	.98	1.00	1.02	1.04	1.06	1.08	1.10	1.12	1.14	1.19	1.23	1.28	1.32	1.36
70	1.00	1.02	1.04	1.06	1.08	1.10	1.12	1.14	1.19	1.18	1.20	1.25	1.30	1.35	1.40	1.45
100	1.06	1.08	1.10	1.12	1.14	1.16	1.19	1.21	1.23	1.25	1.28	1.33	1.38	1.43	1.48	1.54
120	1.09	1.12	1.14	1.16	1.18	1.20	1.23	1.25	1.28	1.30	1.32	1.38	1.43	1.48	1.53	1.58

EXAMPLE: Determine Equivalent "Standard Air" for use in System Performance Calculations:

$$\text{Standard Air} = \frac{\text{Specified CFM}}{\text{Correction Factor}}$$

TABLE II
AIR FRICTION LOSS

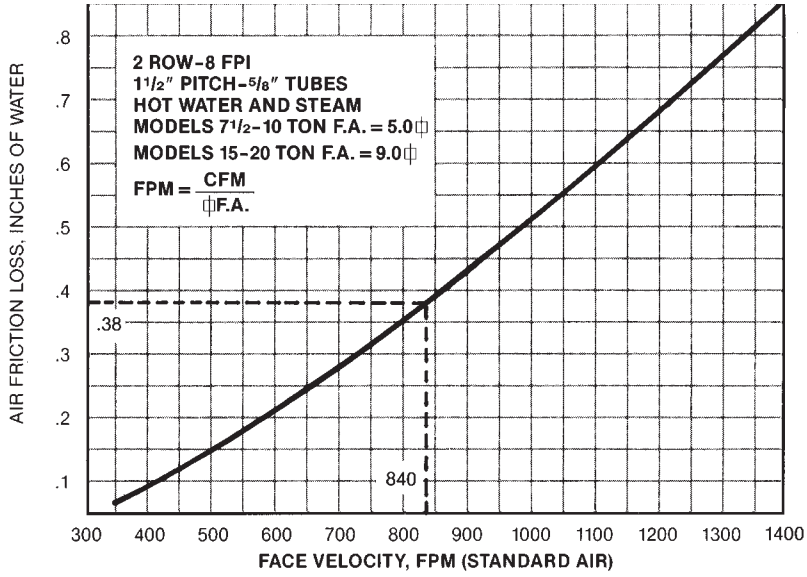

AIR HANDLER ACCESSORIES (con't)

STEAM COILS

CURVE 1
STEAM COIL CAPACITY

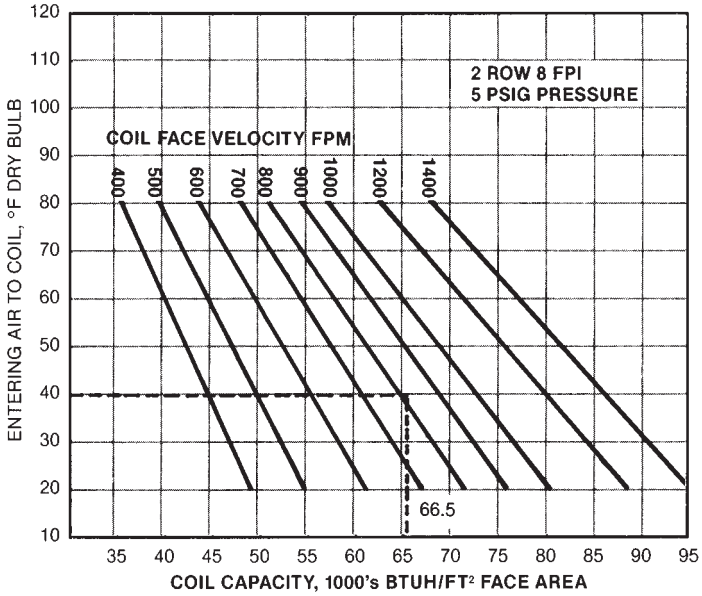

TEMPERATURE OF STEAM AT VARIOUS PRESSURES

Approximate Gauge Pressure (lbs.)	2	5	10	15	20	30
Temperature °F	218	227	240	250	259	275

TABLE III

Steam Coil Capacity, factors are based on 5 PSIG Steam Pressure. For other conditions use the adjacent correction factors.

STEAM PR., PSIG	FACTOR
2	.96
5	1.00
10	1.06
15	1.11
20	1.16
30	1.24

BASIC FORMULA:

$$\text{Air Temperature Rise, °F} = \frac{\text{BTUH}}{1.08 \times \text{CFM}}$$

STEAM COIL SELECTION:

Specified:
Steam @ 30 PSIG
Entering Air Temp. @ 40°F Dry Bulb
5000 CFM @ 6000 Ft. Elevation

Select 10 Ton Nominal Coil:
Face Area = 5 Ft^2
Circuits = 12

Determine Coil Performance:
From Table I (page 21), Altitude and Temperature Correction Factor = 1.19
Std. CFM = 5000/1.19 = 4202
Face Velocity = 4202/5 = 840 FPM
From Curve 1, BTUH/Ft = 66,500
Coil Capacity = 5 x 65,000 = 325,000 BTUH
From Table III, Steam Correction Factor = 1.24
Total Coil Capacity = 1.24 x 332,500 = 412,300 BTUH
Air Temp. Rise = 403,000/(1.08 x 4202) = 90.85°F
From Table II, Air Side Pressure Drop = .38" H_2O

FILTER RACK

The filter rack accessory can be connected directly to the hot water/steam coil accessory. The filter rack accessory is ONLY needed when hot water steam coils are used.

MODEL NO.	AIR HANDLER SIZES USE ON	IN. [mm]					
		A	B	C	D	E	F
RXHF-B74A	090, 120	51 1/2 [1308]	24 [610]	25 1/8 [638]	47 3/8 [1203]	19 7/8 [505]	2 1/16 [52]

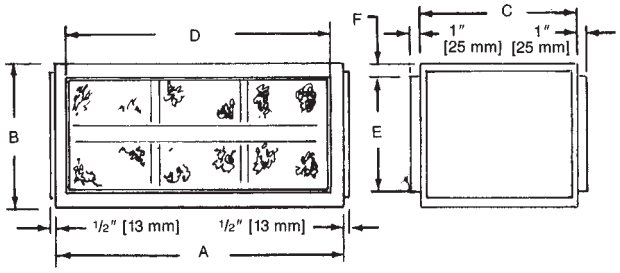

MODEL NO.	FILTER SIZE (QTY.) TYPE
RXHF-B74A	16x20x1 (4) Disposable 20x20x1 (2) Disposable

FILTER PRESSURE DROP:

MODEL NO.	CFM [L/s] x 1000 [472]								
	2	3	4	5	6	7	8	9	10
RXHF-B74A	.01 [2]	.02 [4]	.03 [7]	.07 [16]	.10 [22]	.15 [33]	—	—	—

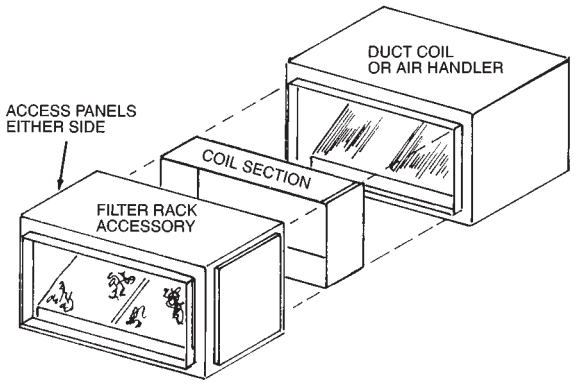

[ ] Designates Metric Conversions

AIR HANDLER ACCESSORIES (con't)

UNIT WITH ACCESSORIES
7.5 THROUGH 10 NOMINAL TONS [26 THROUGH 35 kW]

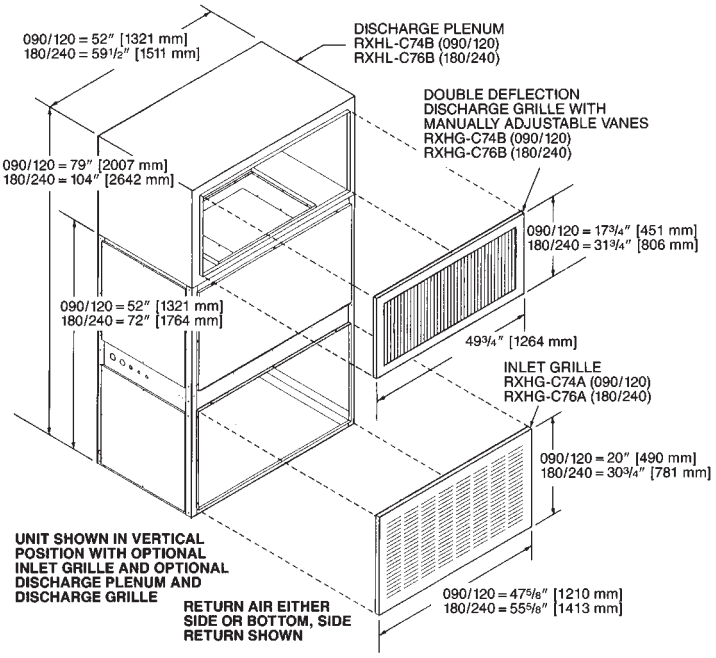

DOUBLE DEFLECTION DISCHARGE GRILLE

MODEL NO.	AIR HANDLER SIZES USED ON	NOMINAL CFM [L/s]	FT. [m] OF THROW
RXHG-C74B	090	3000 [1416]	0° DEFLECTION - 43' [13.1] 22° DEFLECTION - 37' [11.3] 45° DEFLECTION - 22' [6.7]
	120	4000 [1888]	0° DEFLECTION - 53' [16.2] 22° DEFLECTION - 46' [14] 45° DEFLECTION - 27' [8.2]

TYPICAL APPLICATION
7.5 & 10 NOMINAL TONS [26 & 35 kW]

OPTIONAL ELECTRICAL HEATER KIT SHOWN INSTALLED IN HORIZONTAL POSITION AND CONNECTED DIRECTLY TO THE AIR HANDLER. THE HEATER KIT MAY ALSO BE INSTALLED WITH THE AIR HANDLER SET IN THE VERTICAL POSITION. IN EITHER POSITION THE HEATER KIT CONTROL COMPARTMENT MUST BE ON THE LEFT SIDE FACING THE AIR DISCHARGE OPENING.

MODEL NO.	AIR HANDLERS SIZES USED ON	IN. [mm]	
		A	B
RXHE-DE****A	090, 120	20 [508]	20 [508]

THE BOTTOM OF THE AIR HANDLER SHOULD BE SLOPED IN TWO PLANES THAT PITCH THE CONDENSATE TO THE DRAIN CONNECTION. THE DRAIN PAN SHOULD NOT LEAVE PUDDLES LARGER THAN 2 INCHES IN DIAMETER AND 1/8 INCH DEEP FOR MORE THAN 3 MINUTES.

FOUR HEAVY GAUGE ANGLES ARE FURNISHED (SHIPPED LOOSE) FOR SUSPENDING UNITS FROM ALL FOUR CORNERS, MINIMUM OF ½" [13] SUPPORT RODS ARE RECOMMENDED. IF ALL-THREAD IS USED, IT IS ALSO RECOMMENDED THAT TWO NUTS AND TWO LOCKWASHERS BE TIGHTENED SECURELY AGAINST THE SUSPENSION ANGLES.

WHEN HOT WATER OR STEAM COIL, MIXING BOX OR DISCHARGE AIR PLENUM ACCESSORIES ARE REQUIRED, UNITS CANNOT BE SUSPENDED AS ILLUSTRATED, AN ALTERNATE SUSPENSION METHOD SUCH AS ANGLES OR CHANNELS (FIELD SUPPLIED) SHOULD BE LOCATED UNDER UNIT. (SHOWN BELOW)

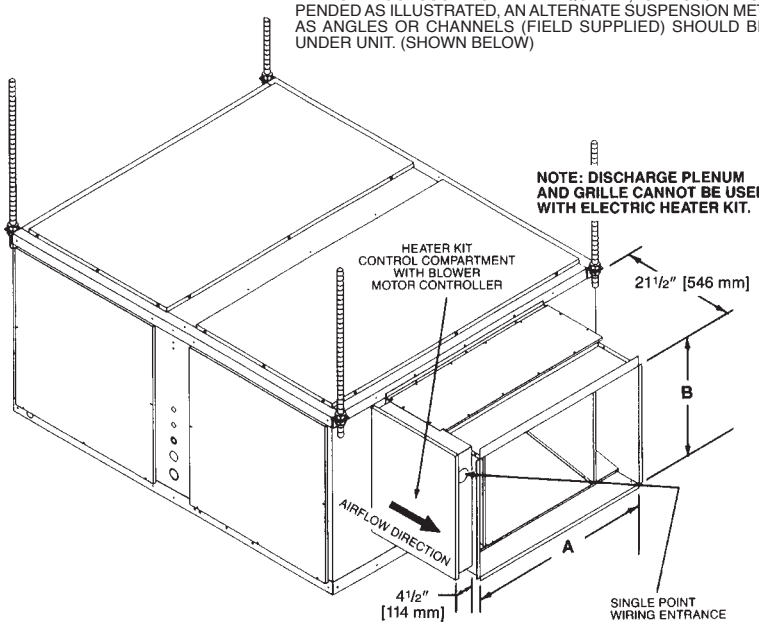

[ ] Designates Metric Conversions

MIXING BOX ACCESSORY—OPERATING SEQUENCE

COOLING SEASON—Thermostat set at "Cool" and "Fan Auto," outside air damper goes to "minimum fresh air" position when cooking thermostat closes, energizing mechanical cooling. When cooling thermostat is satisfied, mechanical cooling is de-energized, and outside air damper closes.

INTERMEDIATE SEASON—Same as for cooling season, except that cooling thermostat closes, starting indoor blower motor, the enthalpy control, mounted on outside air, determines if "free" cooling or mechanical cooling should be utilized. If outside air conditions are suitable for cooling, the mechanical cooling remains off and the mixed air controller modulates the damper motor to assume the proper damper position to maintain mixed air setting. If outside conditions are not suitable for cooling, then the dampers go to "minimum fresh air" position and mechanical cooling is energized.

HEATING SEASON—Damper always stays at "minimum fresh air" position while fan motor is operating. Outside air damper closes when blower motor is off. "Minimum fresh air" position must not allow mixed air temperatures to air handler below 50°F. [10°C] during heating seasons.

CAUTION: IT IS NOT RECOMMENDED THAT HOT WATER OR STEAM COILS BE USED WITH THE MIXING BOX ACCESSORY WITHOUT A SUITABLE FREEZE-STAT TO PREVENT THE POSSIBILITY OF FREEZING THE COIL.

MIXING BOX

MODEL NO.	AIR HANDLER SIZES USED ON	FLANGED DUCT OPENINGS		IN. [mm]
		LENGTH IN. [mm]	WIDTH IN. [mm]	"X"
RXHM-BC74H	090, 120	42 [1067]	16 7/8 [454]	27 [686]

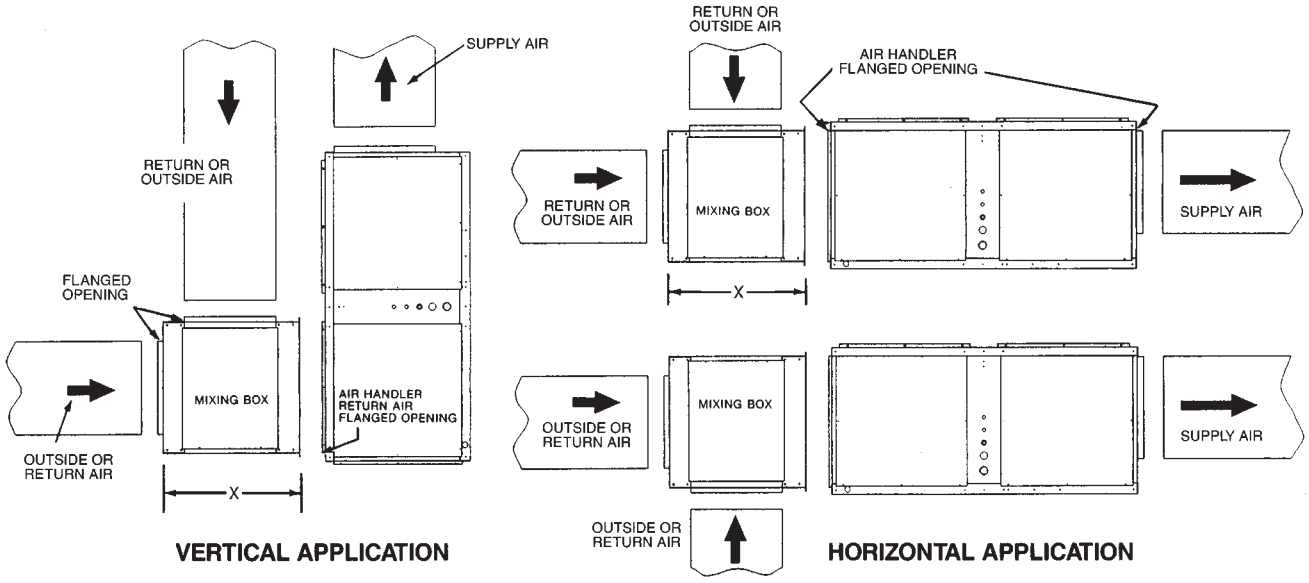

[ ] Designates Metric Conversions

TYPICAL PIPING RECOMMENDATIONS

INDOOR COIL ABOVE OUTDOOR UNIT

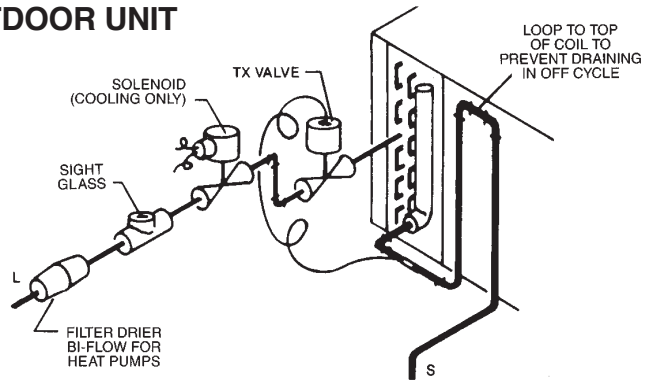

INDOOR COIL BELOW OUTDOOR UNIT

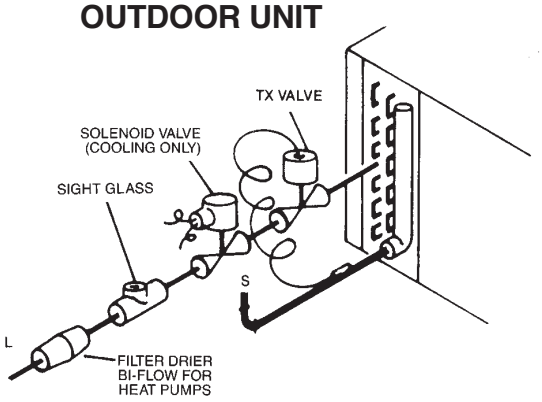

NOTE: PIPING ACCESSORIES SHOWN SHOULD BE MOUNTED AS CLOSE TO AIR HANDLING UNIT AS POSSIBLE.

The 7.5 [26 kW] and 10 [35 kW] Air Handlers are designed as two (2) circuit, full face equal distribution coils. As shipped from the factory, the suction and liquid lines are dual circuits. Copper fittings are supplied in the unit to field manifold the suction and liquid lines for single circuit.

NOTE: The expansion valve bulbs must be secured to the corresponding suction lines. The circuits are marked accordingly. See illustration under Typical Piping recommendations for additional information.

REFRIGERANT PIPING (See Tables at Right)

The following will be of help in accomplishing a successful installation.

1. Size liquid line for no more than 50 PSIG [345 kPa] pressure drop.
2. Size suction lines for no more than 2°F [1.1°C] loss which corresponds to approximately 5 PSIG [34 kPa] pressure drop.
3. When indoor unit is installed below outdoor unit, do not exceed the recommended vapor line O.D. This will insure adequate velocities for proper oil return.
4. Install strainer-drier and sight glass in liquid line.
5. Pitch all horizontal suction lines downward in the direction of flow for cooling only applications.
6. Locate the outdoor unit and indoor unit as close together as possible to minimize piping runs.
7. A liquid line solenoid installed just ahead of the expansion value is recommended for cooling only applications. Be sure condensing unit is suitable for pump down.
8. Piping runs between condenser and evaporator not to exceed 150' [46 m] linear length (90' [27 m] linear length for heat pumps).

NOTE: Refer to suction and liquid line pressure drop charts found in condensing unit and remote heat pump literature.

[ ] Designates Metric Conversions

CONDENSATE DRAIN PIPING

- Consult local codes or ordinances for specific requirements regarding condensate drain.
- Condensate drain is open to atmosphere and must be trapped. Trap must be at least 3 inches [76 mm] deep and made of flexible material or fabricated to prevent freeze-up.
- Pitch the drain line at least 1/4 inch [6 mm] per foot away from the drain pan.
- Do not reduce the drain line size from the connection size provided on the unit.
- Do not connect the drain line to a closed sewer line.

PIPING SIZES 090 & 120				
LINEAR LENGTH, FT. [m]	LIQUID LINE O.D., IN. [mm]		SUCTION LINE O.D., IN. [mm]	
	090	120	090	120
0-50 [0-15]	1/2 [13]	5/8 [16]	1 1/8 [29]	1 3/8 [35]
51-100* [16-30]	1/2 [13]	5/8 [16]	1 3/8 [35]	1 5/8 [41]
101-150 [31-46]	1/2 [13]	5/8 [16]	1 3/8 [35]	1 5/8 [41]

*For cooling only, refer to remote heat pump literature for piping recommendations.

EQUIVALENT LENGTH, FT. [m] OF STRAIGHT TYPE "L" TUBING FOR NON-FERROUS VALVES AND FITTINGS (BRAZED)						
TUBE SIZE INCHES [mm] O.D.	SOLENOID VALVE	ANGLE VALVE	SHORT RADIUS ELL	LONG RADIUS ELL	TEE LINE FLOW	TEE BRANCH FLOW
1/2 [13]	70 [21.3]	8.3 [2.5]	1.6 [0.5]	1.0 [0.3]	1.0 [0.3]	3.1 [0.9]
5/8 [16]	72 [21.9]	10.4 [3.2]	1.9 [0.8]	1.2 [0.4]	1.2 [0.4]	3.6 [1.1]
3/4 [19]	75 [22.9]	12.5 [3.8]	2.1 [0.7]	1.4 [0.4]	1.4 [0.4]	4.2 [1.3]
7/8 [22]	78 [23.8]	14.8 [4.4]	2.4 [0.7]	1.6 [0.5]	1.6 [0.5]	4.8 [1.5]
1 1/8 [29]		18.8 [5.7]	3.0 [0.9]	2.0 [0.6]	2.0 [0.6]	6.0 [1.8]
1 3/8 [35]		22.9 [7.0]	3.6 [1.1]	2.4 [0.7]	2.4 [0.7]	7.2 [2.2]
1 5/8 [41]		27.1 [8.3]	4.2 [1.3]	2.8 [0.8]	2.8 [0.8]	8.4 [2.6]
2 1/8 [54]		35.4 [10.8]	5.3 [1.6]	3.5 [1.1]	3.5 [1.1]	10.7 [3.3]

OPERATING SEQUENCE

NOTE: Please refer to specification sheets covering RAWL- condensing units for operating sequence.

GUIDE SPECIFICATIONS

Furnish and install as shown on the drawing Intensity Model _____ draw through air handler suitable for both horizontal and vertical applications. The entire assembly shall be UL and cUL listed with the cooling (and heat pump heating) capacity A.R.I. Certified.

DRIVE PACKAGE—A complete drive package shall be factory or field installed. Package shall consist of a 3450 RPM dual voltage, single phase open drip proof motor or a 3 phase 1750 RPM open drip proof internally protected motor, not requiring an external starter. Variable pitch motor sheave, fixed pitch fan sheave, and belt.

COILS—Coils shall be fabricated of 3/8" [10 mm] O.D. seamless copper tubing expanded into aluminum fins. All coils shall be submitted to an air pressure test of up to 550 PSIG [2068 kPa] under water after fabrication and dehydrated prior to assembly in unit. Units shall be shipped with a nitrogen holding charge. Airflow shall be draw through design providing uniform air distribution across the coil surface.

BLOWER, BEARINGS AND SHAFT—Fans shall be a double width, double inlet, forward curve, centrifugal type, statically and dynamically balanced, and constructed of galvanized steel. They shall be mounted on 3/4" [19 mm] = 7.5 ton [26 kW] & 10 ton [35 kW], diameter solid shafts made of high carbon steel, centerless ground and polished, supported by resilient mounted sealed bearings.

DRAIN PAN—The drain pan shall be manufactured of zinc coated steel. The pan shall have internally threaded pipe size drain connections and shall be designed to accept condensate in either horizontal or vertical type applications on either side of unit.

FILTERS—Filter mounting hardware shall be designed to accept up to 2" [51 mm] filters for field replacement. One inch [25 mm] throw away filters shall be furnished with the unit.

CABINET—Cabinets shall be manufactured of galvanized steel subjected to multi-stage cleaning and finished with powder coat paint. Units shall have removable service access panels on each side and top.

INSULATION—Cabinets shall be insulated with 1/2" [13 mm] by 1 1/2 pound [.68 kg] density fiberglass insulation coated with neoprene and bonded to the cabinet surface with a U.L. approved adhesive. Insulation shall have fire retarding characteristics in accordance with smoke developed rating not to exceed 50 and flame spread rating of 25 per Underwriters Laboratories testing procedures.

FACTORY TESTING—In addition to the pre-assembly testing mentioned above, each coil shall be leak tested after assembly into the unit. While under pressure, the coil shall be leak tested using an Electronic Leak Detector.

ELECTRIC HEATERS—UL and cUL listed electric heater kits shall be available in a wide range of capacities. All kits shall offer two stages of capacity, blower motor controller and single point connection. Heater kits shall be available for installation directly on the supply fan discharge for either horizontal or vertical application.

MIXING BOX—Mixing box accessory shall be available for mixing return air with outside air before entering the air handler. The accessory shall include both return and outside air dampers and economizer controls factory mounted. Economizer controls shall include enthalpy and mixed air sensors and damper motors. Mixing box accessory shall be available for installation to the return air section of the air handler for either horizontal or vertical applications.

DISCHARGE PLENUM AND GRILLE—Shall be available for vertical application. Discharge grille shall provide manually adjustable double deflection discharge vanes.

RETURN AIR GRILLES—Shall be provided for vertical return applications.

HOT WATER OR STEAM COILS—Shall be available for field installation. All coils shall be tested to 300 psi. Coils shall be available for either horizontal or vertical air handler applications.

[ ] Designates Metric Conversions